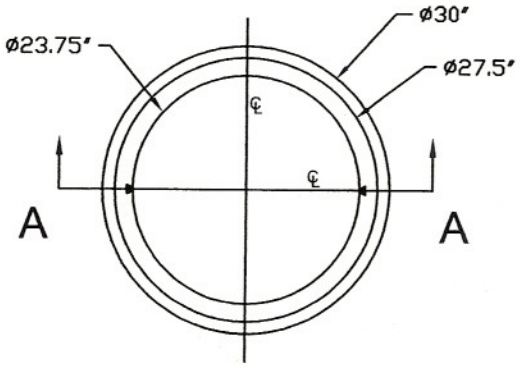


TOP VIEW

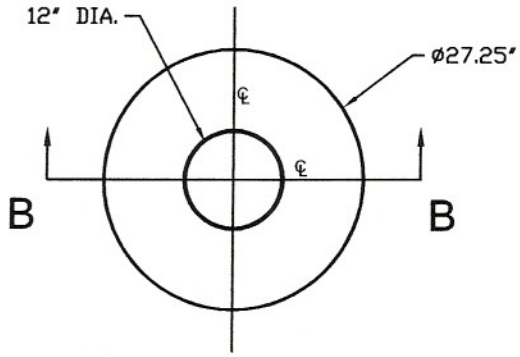


TOP VIEW

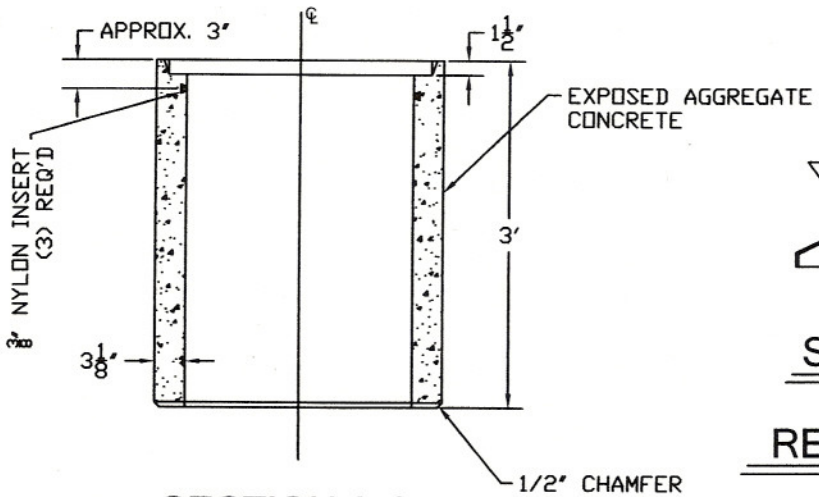


SECTION A-A

RECEPTACLE

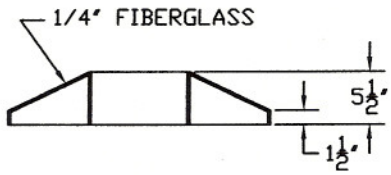


SECTION B-B

RECEPTACLE LID

Bush CONCRETE PRODUCTS, INC.
3584 Airline Road
Muskegon Michigan 49444
(231) 733-1904

36RP Trash Receptacle

| SIZE | DATE | DWG. NO. | REV |
|---|---|---|---|
| A | 12/30/05 | 006 | |
| DRAWN BY: S. GARABEDIAN | | SHEET 1 of 1 | |